Klondike in the Tropics

Polaris District Klondike Derby

January 18-20, 2013

Hosted by the
Polaris District
Activities & Civic
Service Committee

Schedule of Events

Friday, January 18

5:00pm Registration & Setup
9:00pm SM/SPL Meeting & Crackerbarrel
11:00pm Taps

Saturday, January 19

7:00am Reveille
8:00am In-Site Breakfast
Non-Camping Units & Webelos Registration
9:00am Opening Flag Ceremony
9:30–12:00 Patrol Competitions
12:00pm In-Site Lunch
1:00pm Patrol Activities – afternoon patrol activities will be a free time for patrols to visit each. Activities will include:

- snow snakes
- snowshoeing
- dog sleds
- two-man saw
- spar bowling
- igloo building
- "beach" volleyball

3:00pm VOLCANO ERUPTIONS
3:30pm Closing Flag Ceremony
4:00-5:00 Klondike Sled Race
Time Bonus *will be given for* *each* *scout wearing a helmet!*
5:00pm In-Site Dinner
Scoutmaster Cook-Off Judging
7:00pm Religious Services
8:00pm Closing Campfire & Awards
9:00pm Scoutmaster & SPL Crackerbarrel
11:00pm Taps

Sunday, January 20

7:00am Reveille
9:00am Check Out

The Polaris District Klondike Derby
"Klondike in the Tropics"

Greetings Polaris District Boy Scouts,

We are the people of the small—South-west, Pacific island of Malu-tango.

Our people have inhabited this island for centuries, undisturbed by civilization. Only recently, the village elders have decided to seek out the world. We want to begin by inviting people whom we trust to come to our island; what better pick than the Boy Scouts!

Your district is invited to host your 2013 Klondike Derby on our Island.

We are a shy people, and until we get to know outsiders better, we will make your adult Scout leaders, honorary village elders. They will be given instructions on how we would like the Derby to be run.

Thank you, The People of the Island of Malu-tango.

We understand that the Boy Scouts possess some very interesting skills. We have put together a course that takes you across our island paradise and challenges your Scouting skills. Remember, we are shy people and even though you won't see us, we will be watching.

The village elders ask that you please make your campsite look as tropical as possible. After all, atmosphere is everything.

The elders know that Scouts are good at building a fire. Your task here is to build a fire, light it with 2 matches or less, and boil a liter of water.

Here, the elders want you to demonstrate your map reading skills by taking this quiz.

We can see the night sky clearly on our Island. How many constellations can you identify?

This is an area that non-islanders are forbidden to pass. In order to proceed, you must cross piggy-back. The carrying person, however, must be blindfolded and the rider gives directions.

At this point the elders are concerned about you. To signify that your patrol is ok, you must lash these poles together to make a flag stand, with your patrol flag hoisted.

The islanders have heard about first-aid but, are not familiar with it. Could your patrol please demonstrate how to treat an injured person and transport him to safety?

We heard that baseball is America's favorite sport. We have devised a version of baseball that asks you questions to score runs.

From this point on pour patrol must follow compass bearings and distances to proceed.

Are Boy Scouts Athletic? The elders want your patrol to demonstrate your running and this exercise relay.

Those adult Scouters who are representing village Elders as judges, will record your patrol score on the station score sheet. The patrols will not be carrying score cards. Instead each patrol will need a "Nugget Bag." Judges will be giving out "Golden Nuggets" as bonus points. These bonus points will be used as tie breakers at the station events and the overall score for the Schultz Cup. Your patrol needs something to put them in, and the best Nugget Bag gets extra points!

Event stations will be limited to ten. Approximately every two campsites will do the same event. Some campsites will be asked to provide material for their event, while others will be given stuff from staff. There won't be station signs, so follow you map carefully! The fewer events will give scouts an opportunity to take part in some exciting afternoon events and for adults from other troops to work together. Also, there is a $25 gift certificate as 1syt prize in the campsite theme display.

The sled race will start at Seneca campsite and run downhill to Cabin 1. At Seneca a started will call the finish line radio and start the race. At the finish a judge will start time and stop when all members of the patrol have put their hands on the sled.

General Information

Fees and Registration

Advance registration is required. Payment of $9.00 per person is due by January 11, 2013. Any registrations after that date, regardless of when the rest of the group registered, will be charged $12.00 per person. Registrations must be completed on-line at www.wnyscouting.org. Computer access and instruction is available at the council service center. If choosing the "Mail/Offline" option, payments must be received at the council service center by January 11.

BSA Registration

Each youth must be a registered with the BSA to participate in the Klondike. A completed application form including parental information and signatures must be present at sign-in for all prospective Scouts who are not yet registered. A minimum of two adult leaders per Unit must be present in camp at all times. Youth protection training, current within two years, is required for all adults in attendance.

Check-in Procedure

Units may check-in at any time between 5:00pm and 8:00pm on January 18 at the Klondike headquarters. A completed roster and any additional registration fees are required at check-in. The roster form is located at the back of this booklet. Only one vehicle at a time will be allowed to drop off equipment at the campsite. After unloading, all vehicles must be parked in the parking lot for the remainder of the weekend. Units not camping for the weekend may check-in at 8:00am on Saturday. The youth and an adult leader should still plan to attend the Friday leaders meeting.

First Aid

First aid staff will be on call at the Klondike headquarters. All injuries must be reported to the Klondike staff.

Security

Campsites should never be left unsupervised while Scouts are present. Visitors should check in at the Klondike headquarters. Defacing or damaging buildings or camp equipment and cutting or hacking of live trees is prohibited. Alcoholic beverages, illegal drugs, firearms, flares, sheath knives, axes, bows and arrows, and pets are not permitted anywhere at the Klondike. Violators will be removed from camp and the police will be notified. Smoking is not permitted where Scouts may be present. A designated smoking area should be established by each Unit Leader. Dogs are not permitted by units at camp during the event.

Campsites

Campsite assignments will be based on Unit size and communicated at check-in. A preferred campsite may be selected on the registration form. If possible, campsite assignment will be communicated prior to the event. Straw will not be available for sale. Units may bring their own straw if desired. Please dispose of any straw and bindings properly, as they interfere with lawn mowing in the spring.

Fires, Cooking, and Sanitation

An adult holding a current certification in liquid fuels must be present if liquid fuels are to be used. Campfires must be limited to existing fire rings or be above ground. Fires must be attended at all times. According to the GNFC policy on camp firewood, *The Council Properties Committee has adopted a policy that units may not bring their own wood to camp; nor may they take wood home. This was done to be proactive in helping to prevent the spread of insects as well as insure that our leaders are not possibly in violation of the recently enacted NY State DEC ban on transportation of wood beyond 50 miles from its source.* For more information see http://www.wnyscouting.org/openrosters/ViewOrgPageLink.asp?LinkKey=29569&orgkey=1977

Webelos Participation

Second-year Webelos Scouts are invited to attend the Klondike Derby on Saturday under the leadership of their Den Leaders and as guests of a host Boy Scout Troop. Contact activities@polarisdistrict.org if you need to be connected with a Boy Scout Troop. The registration fee is $4.00 for each Webelos Scout and adult. Webelos may observe the patrol competitions but are not expected to compete. If time permits, event staff may allow Webelos to participate on a non-competitive basis.

Venture Participation

Venture Crews are invited to participate fully in the Klondike. Venturing youth over the age of 18 must refrain from participating in the youth competitions.

Leader's Meetings

Each unit must send one youth and adult to the leader's meetings on Friday and Saturday evenings. Event evaluation forms will be provided and must be turned in upon checkout.

Uniforms and Colors

The field uniform should be worn for the religious services. Clothing appropriate for the weather should be worn at all other times. U.S. and Unit flags should be displayed near the entrance of each campsite and brought to the opening flag ceremony.

Awards and Recognition

First, second, and third place awards will be awarded at the Saturday campfire for the patrol competitions, Klondike sled derby, and Scoutmaster cook-off. The Shultz Cup will be awarded to the top overall patrol. Units are encouraged to perform a skit, cheer, or song at the closing campfire. Participation ribbons and event patches will be available at the Saturday leader's meeting.

Religious Services

All are encouraged to attend the Protestant Service, Catholic Mass, or Interfaith Service offered on Saturday evening. Units are also welcome to hold their own Interfaith Service at that time.

Events

Patrol Competitions

Your Patrol's objective is to visit each campsite and complete the assigned task. Patrols will begin the course at 9:30am from their own campsite and travel around camp in a clockwise direction. See the map at the end of this booklet. Patrols are to run the course and get to as many of the stations as possible in the allotted time. Each event site will also be a place where the patrol can stop to get refreshments and eat their trail lunches. Patrols may return to their own campsite if they wish for lunch, although this will take away from time spent on the course. Adult leaders should not travel with the patrols during the competitions.

1. **Fire Building** (Erie/Mohawk) **–** Boil water with limited supplies.
2. **Lashing** (Cabin 1/Rock Pile) **-** Lash poles together to retrieve can.
3. **Baseball** (107 Lean-to/Kick-a-Poo) **–** Answer questions to make it around the diamond.
4. **No Hands Get Up** (Stone Lean-to/Cabin 2) **–** Relay, can you get up without using your hands.
5. **Monster** (Seneca/Open Field) - Patrol must form as a group and move a distance.
6. **Cross Piggy Back** (Niagara Cabin/McKay) – Relay, carrying a scout.
7. **Constellations** (Flats) **–** Who can identify the most constellations in the shortest time.
8. **Stretcher Relay** (Iroquois/Goodman) – Create a stretcher and carry each patrol member.
9. **Compass Bearing** (Pines) **–** Patrol Moves through a course using a compass and measurement.
10. **Map Reading** (Leaders' Lodge) – Answer a map question quiz.

Staffing

The final number of patrol competitions used will be limited by the number of Units in attendance. Each Unit will be expected to host one of the above competitions at their campsite and provide the adult leadership to run the event. The Klondike Staff will provide everything necessary to run the events. Each event should be able to handle two patrols at a time. Patrols should practice their own Unit's event first on a non-competitive basis. Specific rules, scoring information, and supplies will be distributed after the Friday leaders meeting. Contact Jason Crosby (activities@polarisdistrict.org) for details or to request a specific event. Campsites, cabins, and lean-tos will also serve as warming stations. Units should have hot water available for patrols and allow them to prepare their trail lunch in your campsite.

VOLCANO ERUPTION

A VOLCANO is produced over thousands of years as heat a pressure build up. That aspect of a volcano is very difficult to recreate in this experiment. However this volcano will give you an idea of what it might look like when a volcano erupts flowing lava. This is a classic experiment in which a CHEMICAL reaction can create the appearance of a PHYSICAL volcano eruption. You should look at pictures of volcanoes to be familiar with the different types. (A SHIELD volcano, for example is the most common kind of volcano, and yet few people know about them) The reaction will bubble up and flow down the side like a real volcano (only much faster!) Look for videos of volcanoes erupting and be sure that you understand how heat and pressure work to really make volcanoes erupt. During the Klondike we will be erupting model volcanos. Patrols are asked to construct a model volcano before the event and bring it to be erupted at the designated time. There are many web sites that show how to build model volcanos. The volcano eruption will be part of the competition.

Klondike Sled

Scouts will need to transport supplies between the stations using a Klondike sled during the patrol competitions. Each patrol should have its own sled. A suggested sled plan can be found at the end of this booklet. *Required supplies:*

- Small notebook
- Pencil
- Tarp
- Liter of water
- Neckerchiefs for each scout
- Patrol Flag
- Scout Handbook
- Matches
- Compass
- 2 poles or staves, 5 to 6 feet long
- Rope or twine
- Tent Pegs
- First Aid Kit

Klondike Sled Derby

The Klondike Sled Race will run from Cabin 1 to Seneca Campsite beginning at 3:30pm. The sled race will start at the parade ground. Please arrive promptly. In addition to the above list of required supplies for the Klondike sled.

Scoutmaster Cook-Off

A Scoutmaster cook-off will be held on Saturday. Participants must register their entry at the Friday leaders meeting. No precooked ingredients may be used. Judging will be based on will be "blind" this year, your dish must be brought to the judges. Extra efforts could bring extra credit.

Campfire

The campfire will take place on the flats near the Quarry Lake. Each patrol is expected to provide a song, skit, and cheer during the campfire. Please forward your campfire entries to Troop 286 (troop@scouts286.org), prior to the event. Adult Leaders are also encouraged to participate in the campfire. Also, units are encouraged to drop off additional firewood at the flats for the campfire.

The Shultz Cup

Named in honor of longtime Scouters Dave and Betty Shultz, the Shultz Cup is awarded to the top overall patrol at the Klondike. The winning patrol may keep the Cup for one year, and then return it at the 2013 Polaris Klondike Derby. Previous winners are:

2003: Troop 829, Youngstown
2004: Troop 450, Tonawanda
2005: Troop 450, Tonawanda
2006: Troop 107, Buffalo
2007: Troop 841, Niagara Falls
2008: Troop 450, Tonawanda
2009: Troop 225, Kenmore
2010: Troop 450, Tonawanda
2011: Troop 450, Tonawanda
2012: Troop 829, Youngstown

Contact Information

Klondike Chair:	Dan Ingram	drumdan1@juno.com	(716) 283-0055
Council Advisor:	Stuart Schnettler	sschnett@bsamail.org	(716) 512-6215
Activities Chair:	Jason Crosby	activities@polarisdistrict.org	(716)698-9745

Patrol Competition/Campsite Map

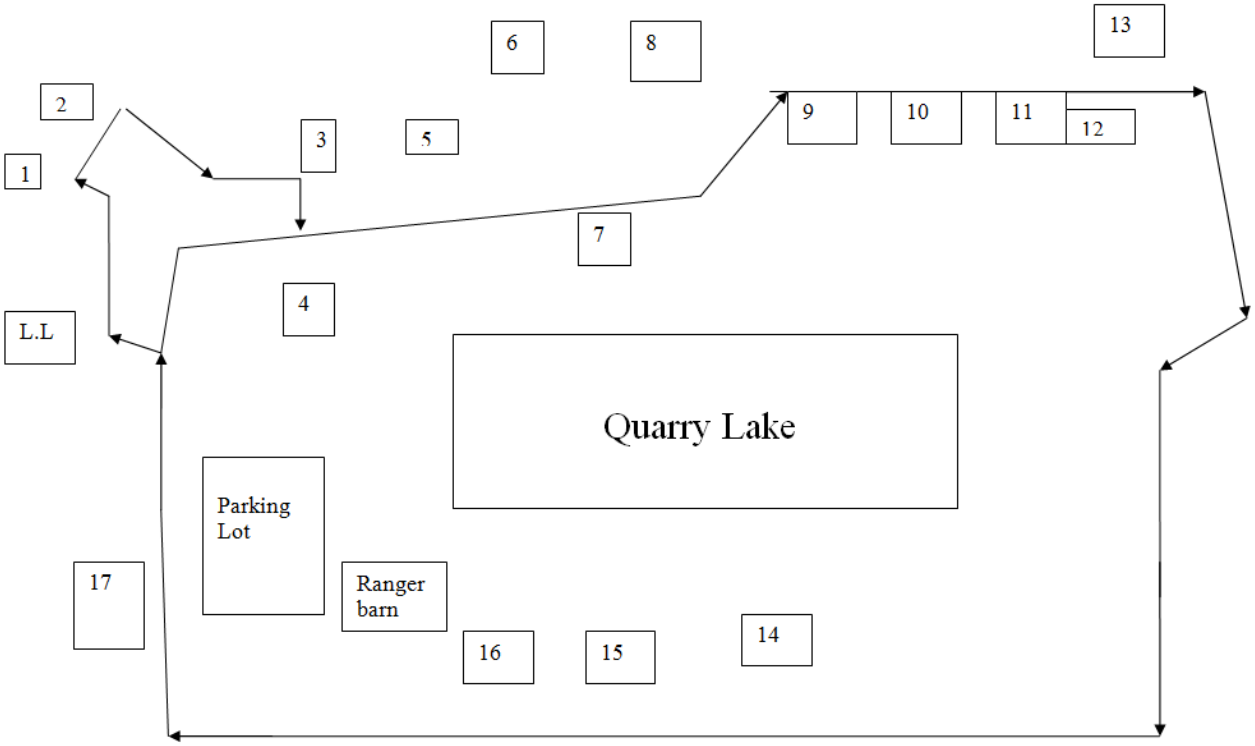

1. Erie: **Fire Building**
2. Mohawk: **Fire Building**
3. Cabin 1: **Lashing**
4. 107 Lean-to: **Baseball**
5. Rock Pile: **Lashing**
6. Stone Lean-to: **No Hands Get Up**
7. Kickapoo: **Baseball**
8. Cabin 2: **No Hands Get Up**
9. Seneca: **Monster**
10. Niagara Cabin: **Cross Piggy Back**
11. McKay: **Cross Piggy Back**
12. Open field: **Monster**
13. Jiawa:
14. Flats: **Constellations/Campfire**
15. Iroquois: **Stretcher Relay**
16. Goodman: **Stretcher Relay**
17. Pines: **Compass Bearing**

L.L. Leaders' Lodge: **Map Reading**

KLONDIKE SLEDGE

1. This is a suggested sled design. Patrols may use their own igenuity in design of their sled, as long as it confirms to these basic dimensions.
2. Sledge must weigh a minimum of 40 lbs empty.
3. Sledge must clearly display patrol name, troop number and carry your patrol flag home made or otherwise throughout the Derby.

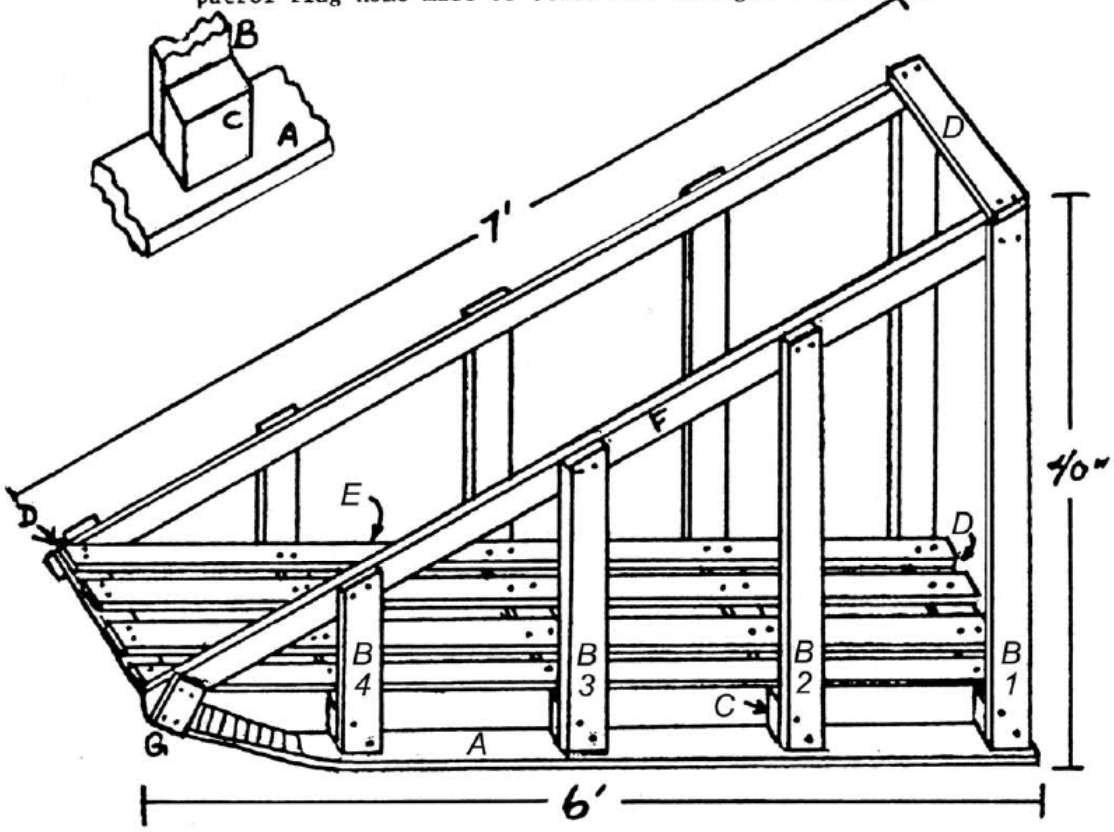

BILL OF MATERIAL

PART	KEY	NO. PIECES	DIMENSIONS
Runners	A	2	1" x 4" x 6'
Uprights	B1	2	1" x 4" x 3' 6"
	B2	2	1" x 4" x 2' 8"
	B3	2	1" x 4" x 1' 9"
	B4	2	1" x 4" x 10"
Upright supports	C	8	2" x 4" x 4"
Cross supports	D	6	1" x 4" x 1' 6"
Floor strips	E	4	1" x 4" x 6'
Hand rails	F	2	1" x 4" x 7'
Front supports	G	2	1" x 4" x 6"

POLARIS KLONDIKE DERBY
CAMP STONEHAVEN
JANUARY 18-20, 2012

UNIT ROSTER

UNIT # _____ District: _____

This form must be turned in at registration
Register on-line at www.wnyscouting.org

ADULTS

Name	**Position**

YOUTH

SPL: _____

Patrol:	**Patrol:**	**Patrol:**
PL:	PL:	PL:

Total Adults: _____ Total Youth: _____

Klondike Score Sheet
Event

Name_____

Patrol/# Score

Time

Campsite game assignments:

Erie/Mohawk

Fire building: Patrols build and light fire with two matches or less to boil liter of water.10 points total. Deduct points for using more than two matches and anything else at judge's discretion. Fastest time and highest score wins. 10 min time limit. 2 large coffee cans required by event campsite.

Cabin 1/Rock Pile:

Lashing. Using poles from their sleds and those provided by the campsite, patrols are to construct a flag pole and raise their patrol flag at the top. 10 points total. Deduct points for bad lashes or no flag also anything else at judge's discretion. Fastest time and highest score wins. 10 min time limit. Staff will provide twine and event campsite will provide six, 6 foot poles or sticks, three each for two flag poles.

107 Lean-t/Kickapoo:

Boy Scout baseball.

The "pitcher" (judge) will present Scout with 3-5 cards with—single, double, triple, homerun, walk, strike, and fly-out—written on them. The cards will be held so that the scout cannot see the words. The Scout picks a card and then answers a question relating to the card. Baseball rules will apply. Scout advances to corresponding base if answer is correct. If incorrect, he is out. Patrol must score ten runs in the shortest time to win. Time limit 15 minutes.

Area needed: large enough to simulate 2 small baseball diamonds.

Material: 3-5 cards. Questions provided by staff at Friday Cracker Barrell

Stone Lean-to/Cabin 2.

No Hands Get Up Patrol forms line. First Scout runs to turning point, stops, lies down on backs, folds hands across chest and gets up without moving arms, and run back to finish line. Game continues until ten scouts have run the relay. If Patrol has less than ten scouts, some boys must run more than once to make ten runs. One point for every correct action, deduct point for every time arms are unfolded. H Highest score and fastest time wins. 10 min time limit.

Seneca/Open field:

Monster Patrol must form group and move 20 ft. No more than half the legs of the group and half the arms, plus one, may touch the ground. All group members must be connected to form the monster. 10 points total, deduct point for more limbs touching ground or collapse of monster or failure to complete course. Fastest time and highest score wins. 10 min time limit.

Niagara Cabin/McKay:

Cross piggy-back. Patrol forms line. Patrol leader is carried piggy-back around a cone by each of the rest of his patrol. If Patrol has less than ten scouts, some boys must run more than once to make ten. 10 points total, deduct point for dropped riders, failure complete course, etc. Fastest time and highest score wins. 10 min time limit.

Flats:

Constellations. Using game sheets provided by staff, patrols identify the most constellations in the quickest time. Patrols write answer on note pad that they carry with them.

Iroquois/Goodman:

Stretcher Relay. Patrol forms line. First two scouts create a stretcher and carry the patrol leader around a course. The next two scouts repeat the course until ten runs have been completed. If Patrol has less than ten scouts, some boys must run more than once to make ten. 10 points total, deduct point for dropped victim or failure to complete course. Fastest time and highest score wins. 10 min time limit.

Pines:

Compass bearings. Patrols will run a course using compass and measuring. Course will be provided by staff at Friday Cracker Barrel.

Leaders' Lodge.

Map reading. Patrols will answer map questions from a quiz from Boys' Life, provided by staff.